Brass Insert Design Guide for SLS Parts

If you are thinking of using brass inserts in your SLS parts please take a moment to look through this quick design guide to make sure the parts are printed ready to have the inserts pushed in. As standard we use the 'Tappex Multisert' brass insert as this covers a variety of applications.

The inserts are pushed in using a heat staking process, the key points to remember when designing a hole for an insert are the Hole Diameter (C), the Wall Thickness around the hole (W) and the Depth of the Hole (Y).

The values quoted for (W) are a minimum guide to prevent side wall deformation when the insert is pushed in.

If you have any questions regarding this process please feel free to call us to discuss your project.

Code	Size	L (mm)	C (mm)	W (mm)	Y (mm)
002M2	M2	3.1	3.4	2	3.2
002M3	M3	4.1	3.7	2.5	4.2
002M4	M4	5.6	5.6	3	5.8
002M5	M5	6.6	6.5	3.5	6.8
002M6	M6	7.7	8	4	7.9
002M8	M8	8.3	10.1	5	8.9
002M10	M10	10.5	13.5	6	10.7
001M12	M12	16.1	15.8	7	16.3

L	Length of Insert
C	Hole Diameter
W	Wall Thickness
Y	Hole Depth

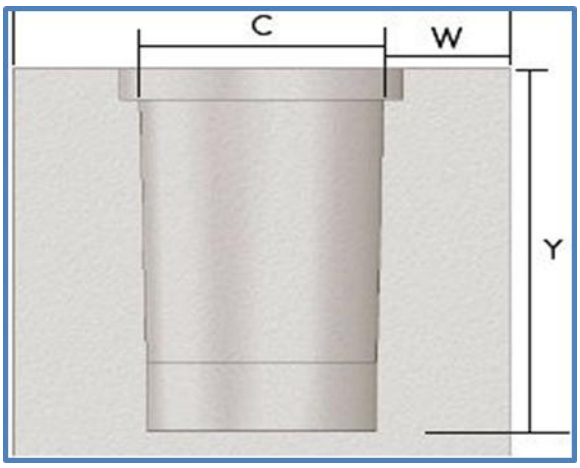

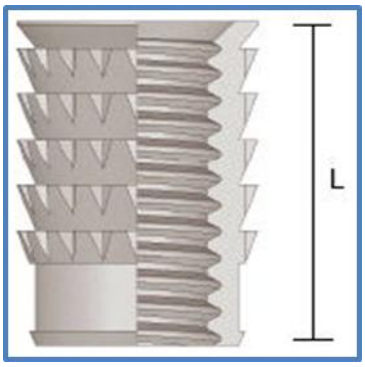

DON'T FORGET, *if your design restricts you from using brass inserts and you still need a thread, SLS can have threads tapped directly in to the printed material, in this instance* ***standard tapping hole sizes apply.***

Stainless Steel Inserts are available on request.

TEL: 08450 514900